TERMINALS SPECIFICATION DRAWING

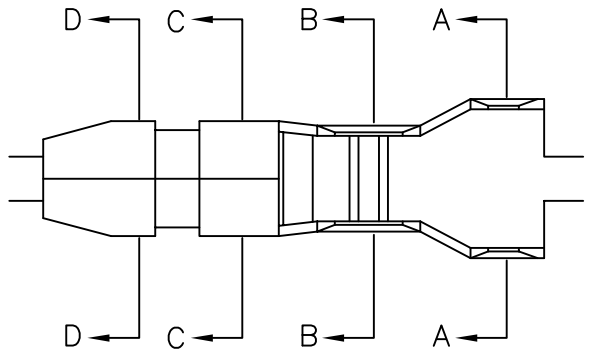

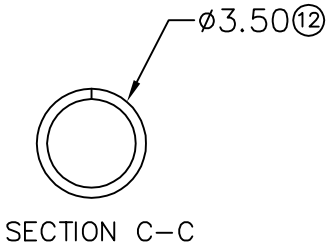

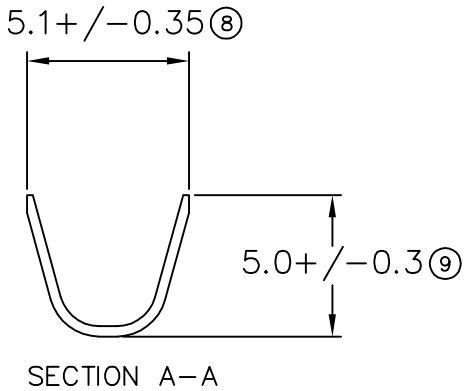

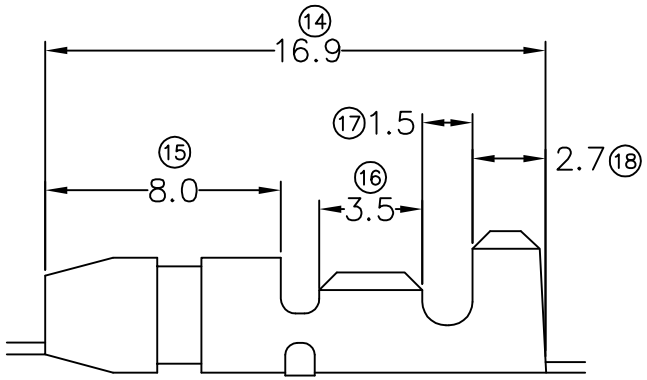

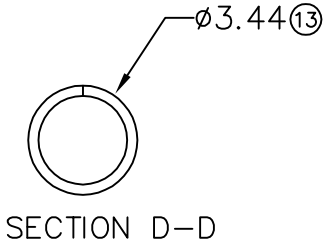

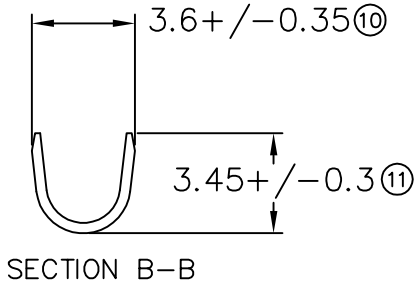

FOR REFERENCE ONLY

7) CRIMPING WIRE TENSILE FORCE IS BASE ON COPPER BREAK OFF INTENSITY.
6) TEMPERATURE RANGE -40°C TO +120°C.
5) VOLTAGE-MAX [VOLTS] PER WIRE SPECIFICATION.
4) THICKNESS PLATING MORE THAN 40μ INCH.
3) PACKING QTY : 8000 PCS/REEL.
2) WIRE INSULATION (O.D) : 2.9MM.
1) APPLICABLE WIRE RANGE : 1.05–0.47MM².

SPECIFICATION :

MATERIAL: t0.35 BRASS C2680	TIN PLATING	28041A–2
	NONE	28041A–1
	TREATMENT SELECTIVE	PART NUMBER
DIMENSIONS : MM	DWN: KS YEW	EPi Terminals & Connectors Elamp Precision Industry(M) Sdn.Bhd.
TOLERANCE UNLESS OTHERWISE SPECIFIED: X.XXX +/–0.05 X.XX +/–0.10 X.X +/–0.20 X +/–0.50	CHK: SC CHOO APVD: Y.L CHUANG	PART NAME: 4.0MM DIA. BULLET TERMINALS
REVISION: 03	SCALE : FREE	APPLICABLE (1) TERMINALS (2) HOUSING
	DRAWING NO: A1356	(1) 18041A (2) –
SHEET OF : 1 / 1	EFFECTIVE DATE : 30/8/07	